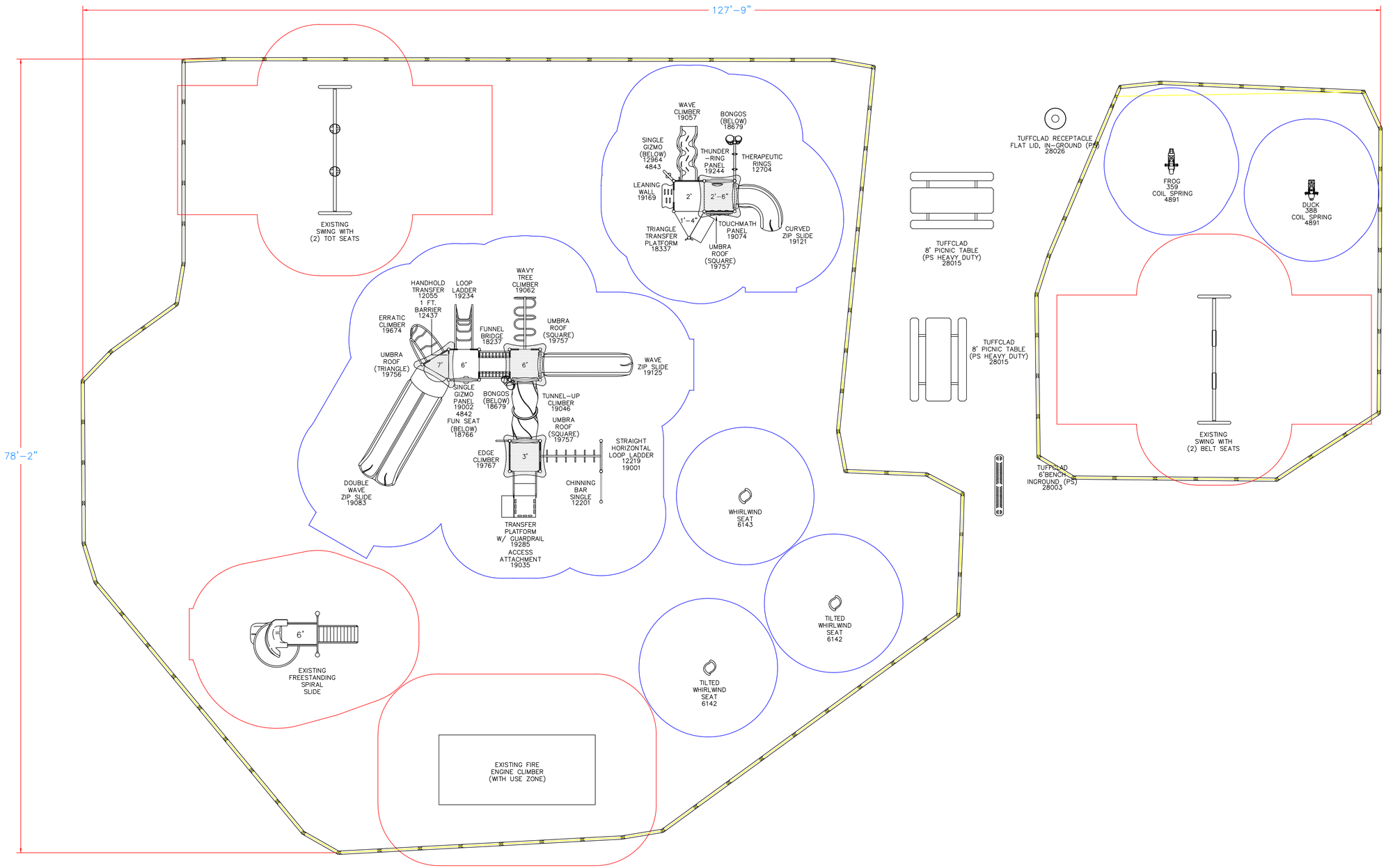

APPROXIMATE USE ZONE OF EXISTING EQUIPMENT OUTLINED IN RED

1 5
0 2 10
SCALE IN FEET

GameTime® A PLAYCORE Company

ISO 9001 CERTIFIED

ISO 14001 CERTIFIED

150 PlayCore Drive SE
Fort Payne, AL 35967
www.gametime.com

Davis Springs HOA
Playground Renovation
Austin, TX

Representative
Total Recreation Products, Inc.

This unit includes play events and routes of travel specifically designed to meet the 2010 DOJ ADA (Americans with Disabilities Act) Standards for Accessible Design.

Total Elevated Play Components	-		-
Total Elevated Play Components Accessible By Ramp	-	Required	-
Total Elevated Components Accessible By Transfer	-	Required	-
Total Accessible Ground Level Components Shown	-	Required	-
Total Different Types Of Ground Level Components	-	Required	-

This play equipment is recommended for children ages
5-12

Minimum Area Required:
127'-9" x 78'-2"

Scale:
This drawing can be scaled only when in an 24" x 36" format

IMPORTANT: Soft resilient surfacing should be placed in the use zones of all equipment, as specified for each type of equipment, and at depths to meet the critical fall heights as specified by the U.S. Consumer Product Safety Commission, ASTM standard F 1487 and Canadian Standard CAN/CSA-Z-614

Drawn By:
TCV

Date:
01/08/2019

Drawing Name:
TV-01008-19-1A1

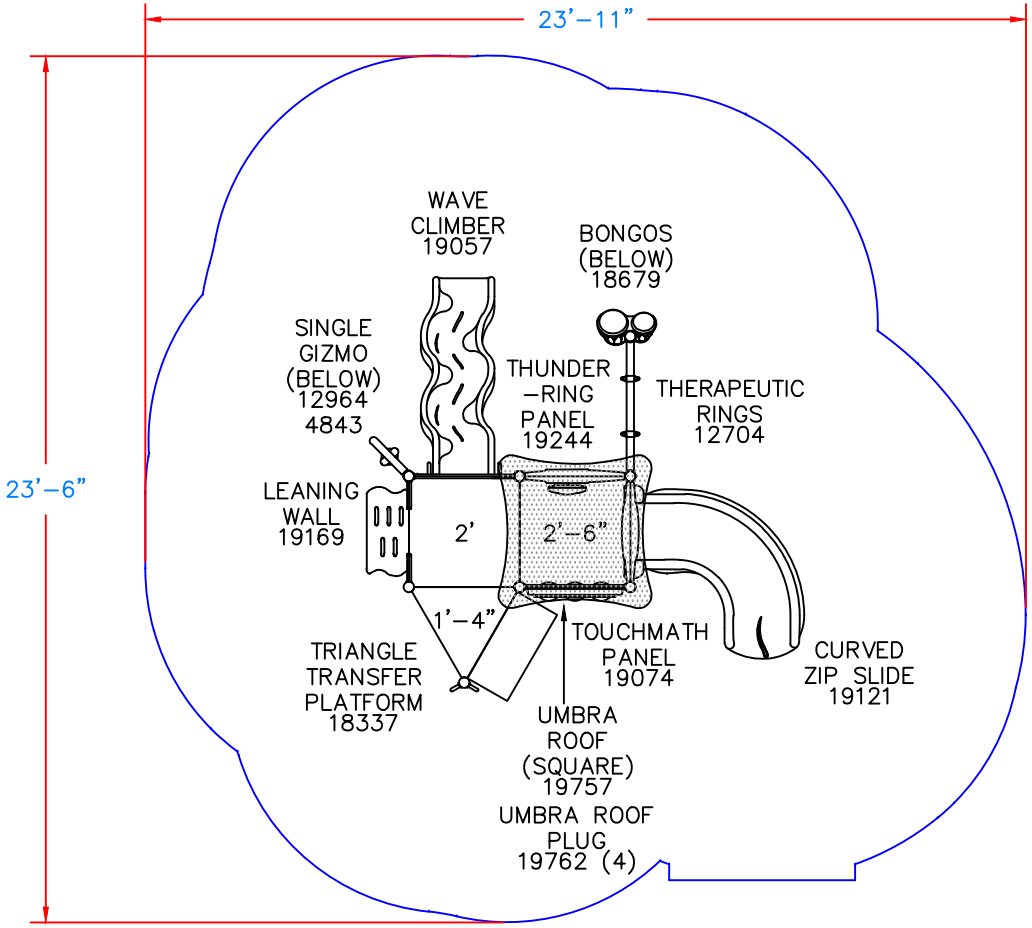

This unit includes play events and routes of travel specifically designed to meet the 2010 DOJ ADA (Americans with Disabilities Act) Standards for Accessible Design.

Total Elevated Play Components	5		
Total Elevated Play Components Accessible By Ramp	-	Required	-
Total Elevated Components Accessible By Transfer	5	Required	3
Total Accessible Ground Level Components Shown	3	Required	2
Total Different Types Of Ground Level Components	3	Required	2

GameTime
A PLAYCORE Company
150 PlayCore Drive SE
Fort Payne, AL 35967
www.gametime.com

ISO 9001 CERTIFIED

ISO 14001 CERTIFIED

Davis Springs HOA
Custom PrimeTime Play Unit
Austin, TX

Representative
Total Recreation Products, Inc.

This play equipment is recommended for children ages
2-5

Minimum Area Required:
23'-11" x 23'-6"

Scale:
This drawing can be scaled only when in an 8 1/2" x 11" format

IMPORTANT: Soft resilient surfacing should be placed in the use zones of all equipment, as specified for each type of equipment, and at depths to meet the critical fall heights as specified by the U.S. Consumer Product Safety Commission, ASTM standard F 1487 and Canadian Standard CAN/CSA-Z-614

Drawn By:
TCV

Date:
01/08/2019

Drawing Name:
TV-01008-19-2A1

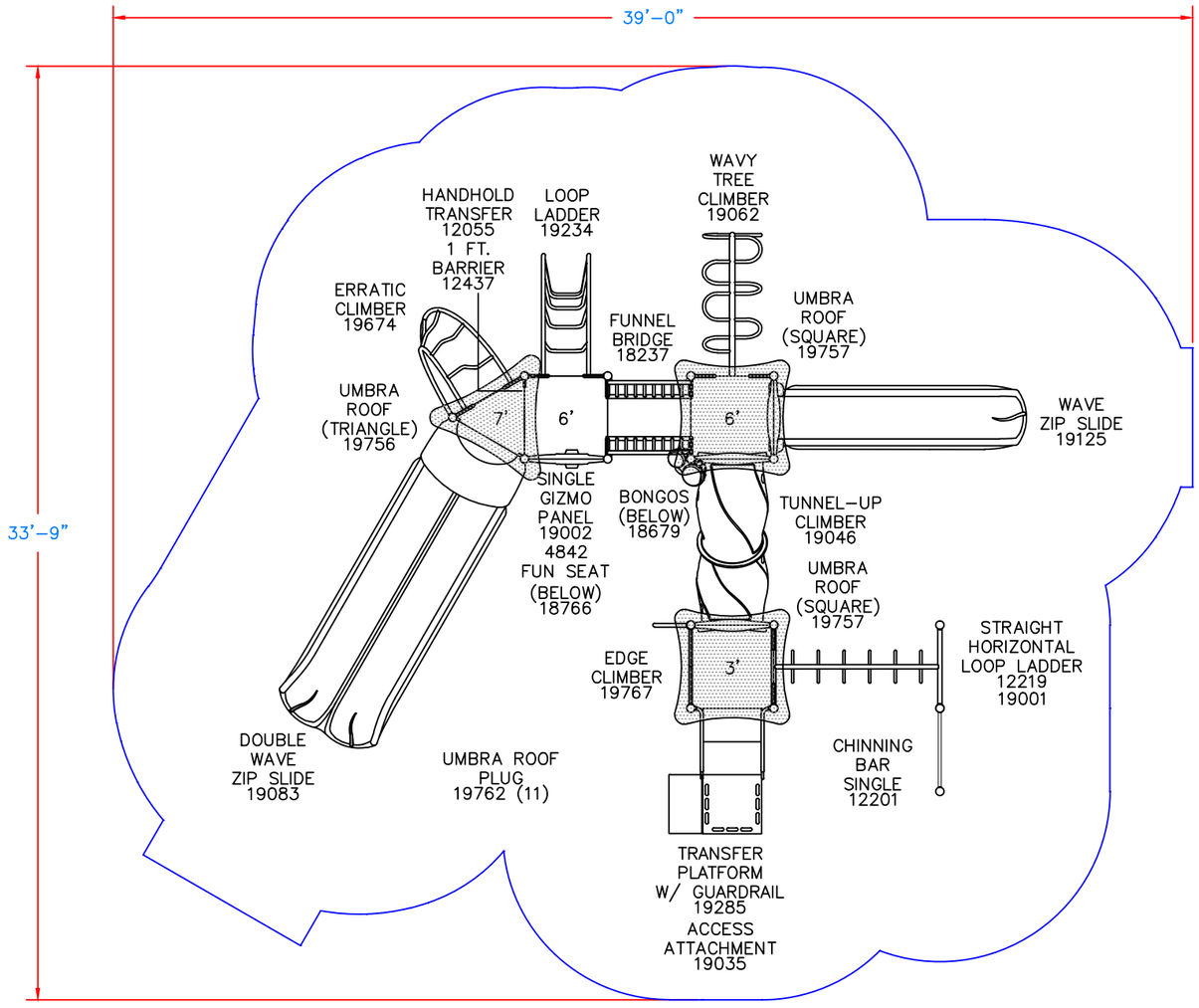

This unit includes play events and routes of travel specifically designed to meet the 2010 DOJ ADA (Americans with Disabilities Act) Standards for Accessible Design.

Total Elevated Play Components	10		
Total Elevated Play Components Accessible By Ramp	-	Required	-
Total Elevated Components Accessible By Transfer	8	Required	5
Total Accessible Ground Level Components Shown	3	Required	3
Total Different Types Of Ground Level Components	3	Required	3

GameTime
A PLAYCORE Company
150 PlayCore Drive SE
Fort Payne, AL 35967
www.gametime.com

ISO 9001 CERTIFIED
ISO 14001 CERTIFIED

Davis Springs HOA
Custom PrimeTime Play Unit
Austin, TX

Representative
Total Recreation Products, Inc.

This play equipment is recommended for children ages
5-12

Minimum Area Required:
39'-0" x 33'-9"

Scale:
This drawing can be scaled only when in an 11" x 17" format

IMPORTANT: Soft resilient surfacing should be placed in the use zones of all equipment, as specified for each type of equipment, and at depths to meet the critical fall heights as specified by the U.S. Consumer Product Safety Commission, ASTM standard F 1487 and Canadian Standard CAN/CSA-Z-614

Drawn By:
TCV

Date:
01/08/2019

Drawing Name:
TV-01008-19-2A2